ALUMINUM-STEEL TRANSPORT

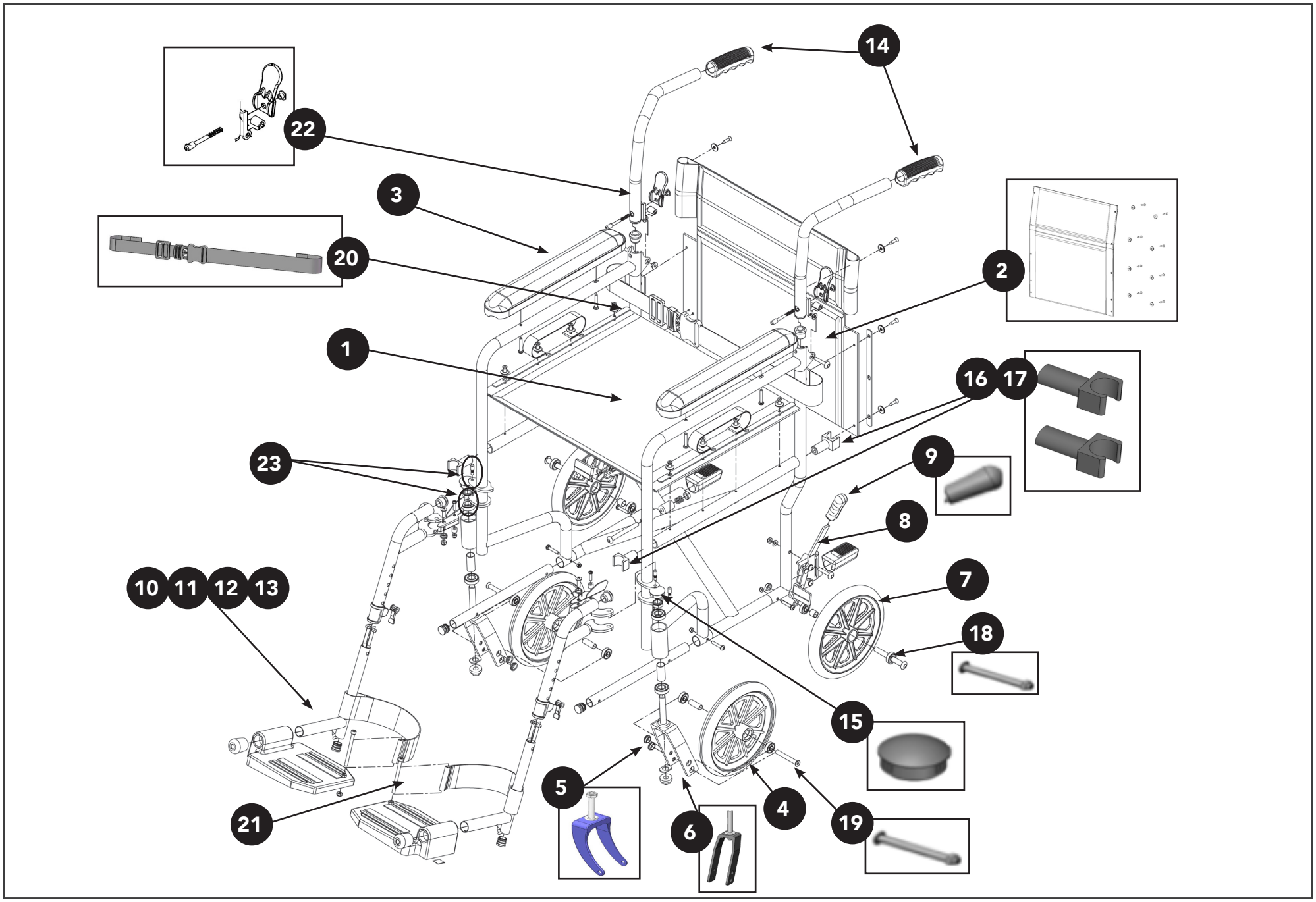

ALUMINUM-STEEL TRANSPORT

Fig.	Description	Part No.
1	Probasics Transport Chair 19" Seat Upholstery w/Hardware	X1TCAS01
2	Probasics Transport Chair 19" Back Upholstery w/Hardware	X1TCAS03
3	Probasics Transport Chair Armrest Pad, Full-Length w/Hardware	X1TCAS05
4	Probasics Transport Chair Front Caster w/Bearing	X1TCAS07
5	Probasics Transport Chair Steel Front Caster Fork w/Stem Bearings	X1TCAS09
6	Probasics Transport Chair Alum. Front Caster Fork w/Stem Bearings	X1TCAS10
7	Probasics Transport Chair 8" Rear Wheel w/Bearings	X1TCAS11
8	Probasics Transport Chair Wheel Lock Assembly	X1TCAS14
9	Probasics Transport Chair Wheel Lock Tip	X1TCAS17
10	Probasics Transport Chair Silver Vein Swing-Away Footrest	X1TCAS18
11	Probasics Transport Chair Burgundy Swing-Away Footrest	X1TCAS19
12	Probasics Transport Chair Blue Swing-Away Footrest	X1TCAS20
13	Probasics Transport Chair Pink Swing-Away Footrest	X1TCAS21
14	Probasics Transport Chair Hand Grips, Pair	X1TCAS24
15	Probasics Transport Chair Stem Dust Cap for Fork	X1TCAS25
16	Probasics Transport Chair Steel TC Seat Rail Guide	X1TCAS26
17	Probasics Transport Chair Aluminum TC Seat Rail Guide	X1TCAS27
18	Probasics Transport Chair Rear Wheel Axle Bolt w/Nut	X1TCAS28
19	Probasics Transport Chair Caster Axle Bolt w/Nut	X1TCAS32
20	Probasics Transport Chair Seat Belt	X1TCAS33
21	Probasics Transport Chair Heel Loop	X1TCAS34
22	ProBasics Transport Chair Folding Back Hinge w/Hardware	X1TCAS35
23	ProBasics Transport Chair Footrest Pins (Pair)	X1TCAS37