6” ALUMINUM ROLLATOR

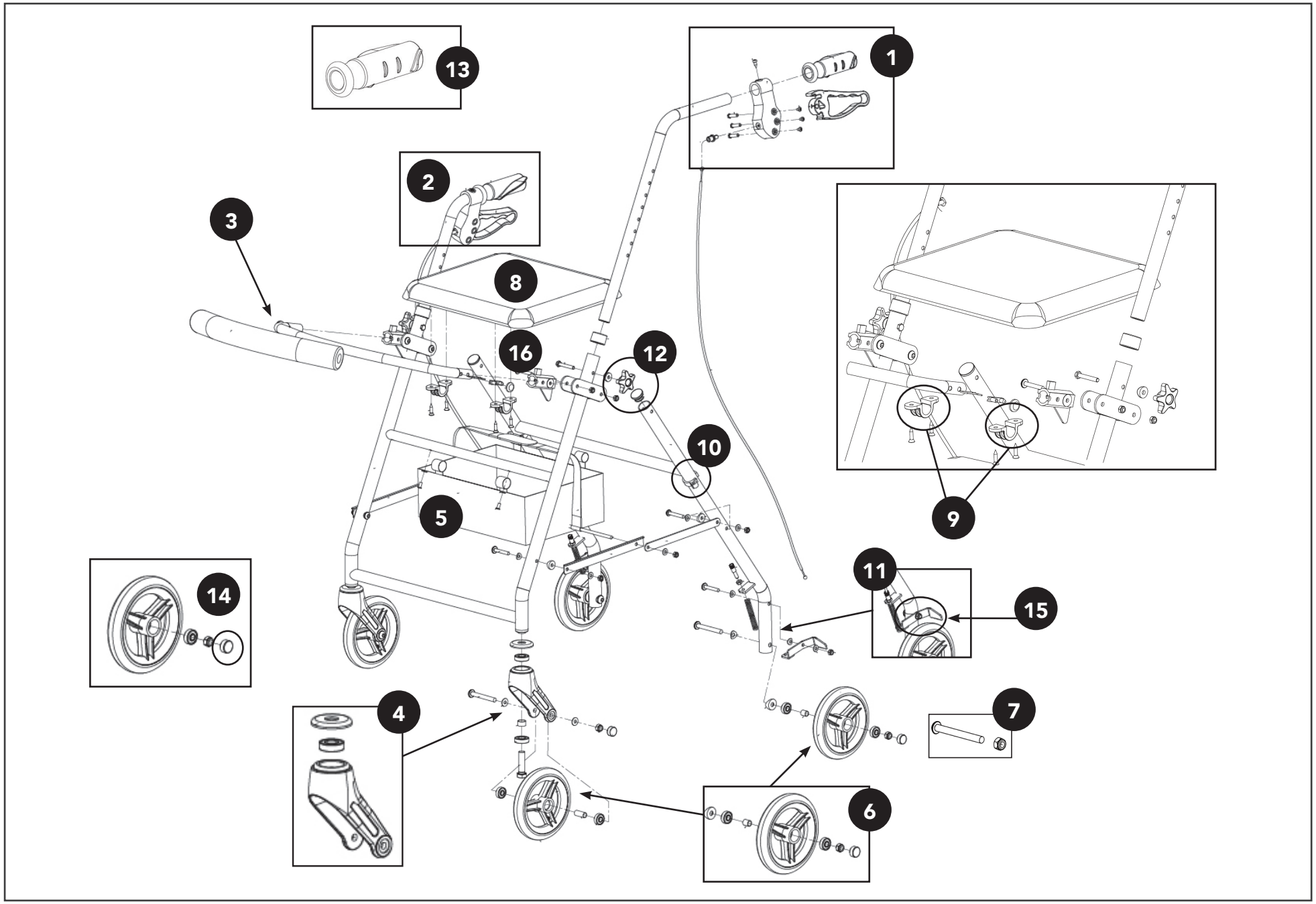

6" ALUMINUM ROLLATOR

Fig.	Description	Part No.
1	ProBasics 6" Alum. Rollator Left Hand Brake System (Includes brake spring & wheel contact)	X1RLA6MH01
2	ProBasics 6" Alum. Rollator Right Hand Brake System (Includes brake spring & wheel contact)	X1RLA6MH02
3	ProBasics 6" Alum. Rollator Backrest (Hardware Not included)	X1RLA6MH03
4	ProBasics 6" Alum. Rollator Front Caster Fork Assembly	X1RLA6Q01
5	ProBasics 6" Alum. Rollator Replacement Pouch	X1RLA6MH05
6	ProBasics 6" Alum. Rollator Caster w/Bearing (Front or Rear)	X1RLA6MH06
7	ProBasics 6" Alum. Rollator Caster Axle Bolt w/Nut (Front or Rear)	X1RLA6Q03
8	ProBasics 6" Alum. Rollator Replacement Seat	X1RLA6MH08
9	ProBasics 6" Alum. Rollator Seat Clips and Screws	X1RLA6MH09
10	ProBasics Brake Cable Ring	X1RLMH01
11	ProBasics Rollator Brake Spring	X1RLMH02
12	ProBasics Rollator Handle Height Adjustment Knob	X1RLMH03
13	ProBasics Rollator Handle Grips, Pair	X1RLMH04
14	ProBasics Rollator Caster Cap	X1RLMH05
15	ProBasics Rollator Brake Wheel Contact	X1RLA6Q02
16	ProBasics Rollator Backrest Fixator (L/R Set)	X1RLBL07